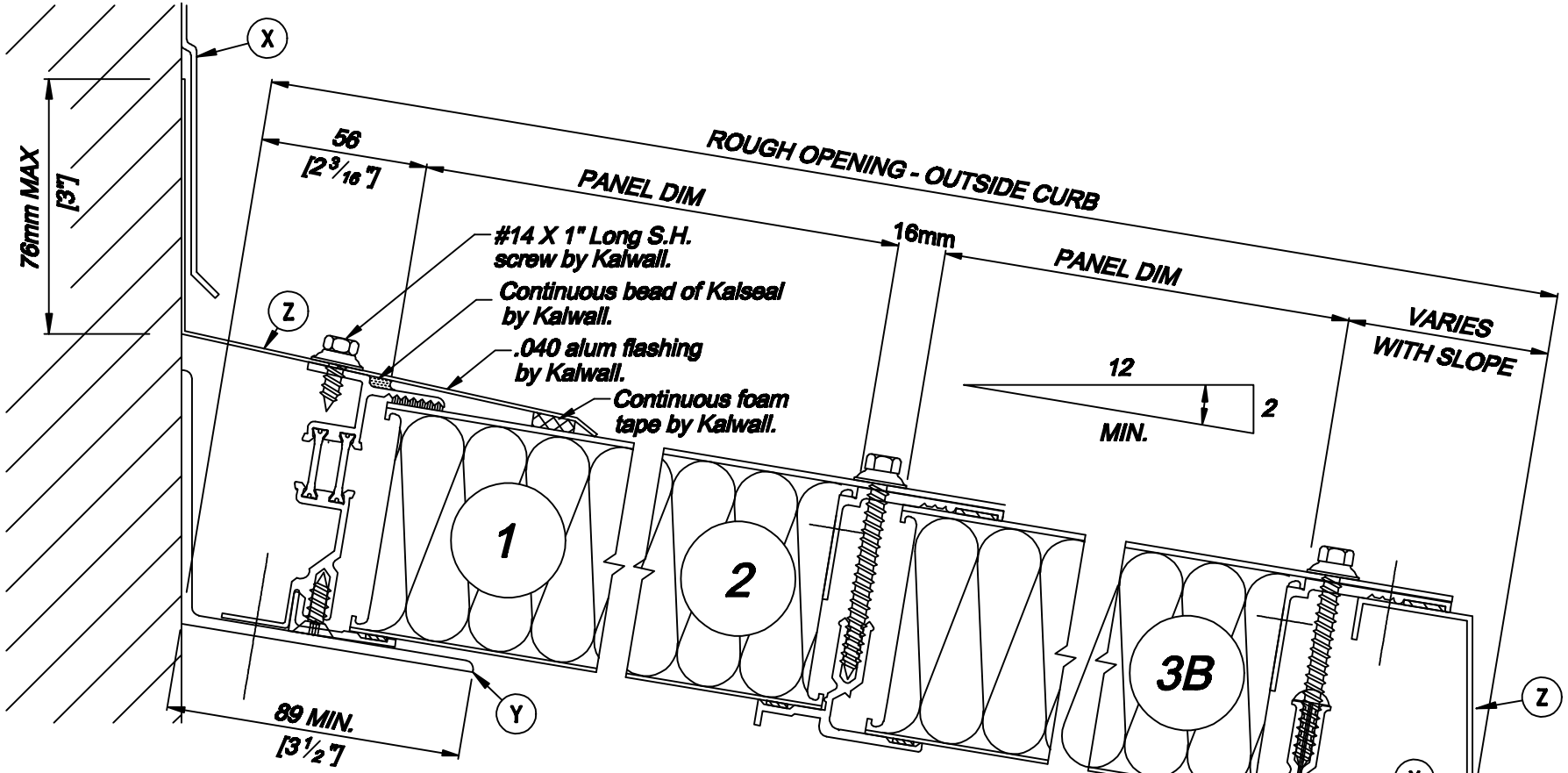

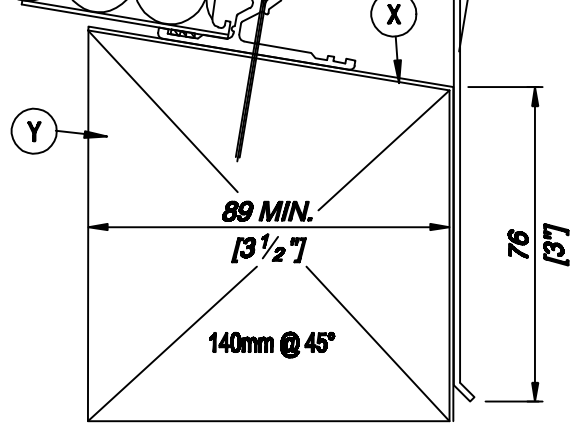

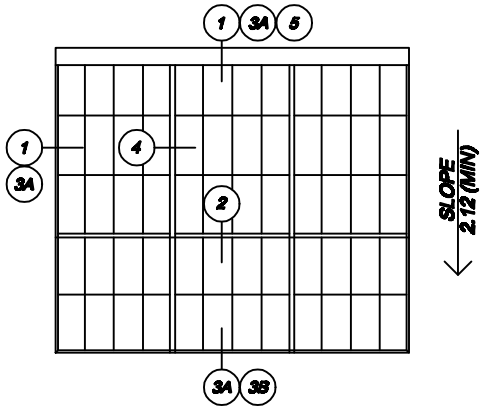

SUPPORTED ROOFS

(X) COUNTER FLASHING NOT BY KALWALL

(Y) SUPPORT NOT BY KALWALL

(Z) STANDARD FLASHING BY KALWALL

STANDARD KALWALL DETAILS
SUPPORTED ROOFS

Stoakes Systems Ltd. 1, Banstead road, Purley, Surrey, CR8 3EB
Tel: 020 8660 7087 Fax: 020 8660 5707 Email: design@stoakes.co.uk

This drawing is copyright and may not be reproduced in whole or in part without written consent of Stoakes Systems Limited.

STOAKES
STOAKES SYSTEMS LTD

Detail Ref. **08R-STD/02**

Date. 19/06/97	Rev. D
System. 08T	Scale. 1=2

08R-STD/02