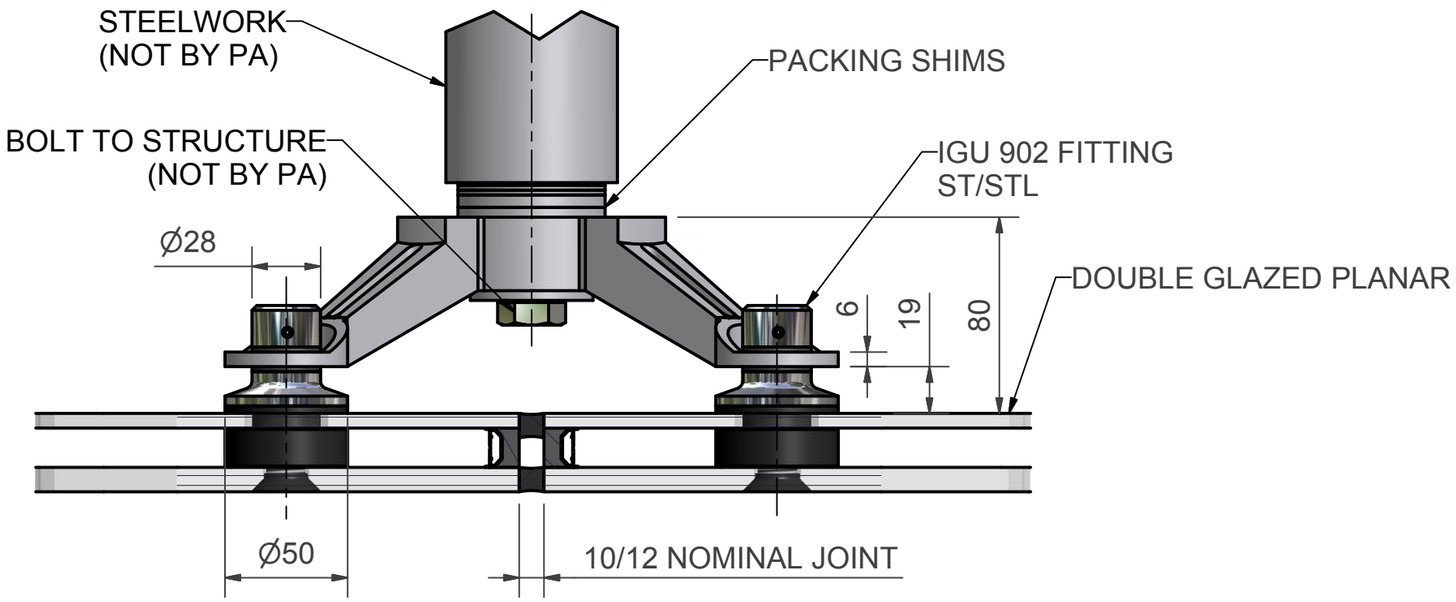


SECTION A-A

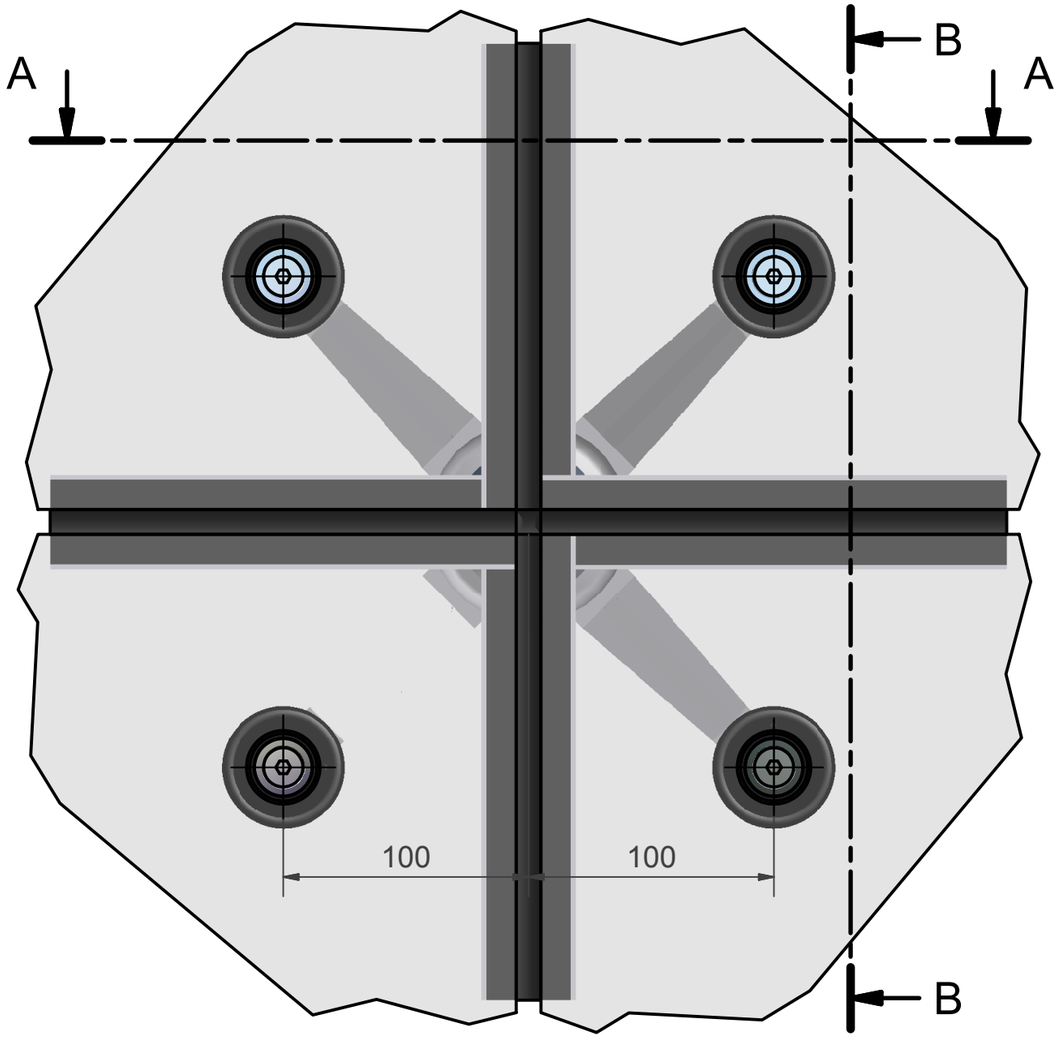


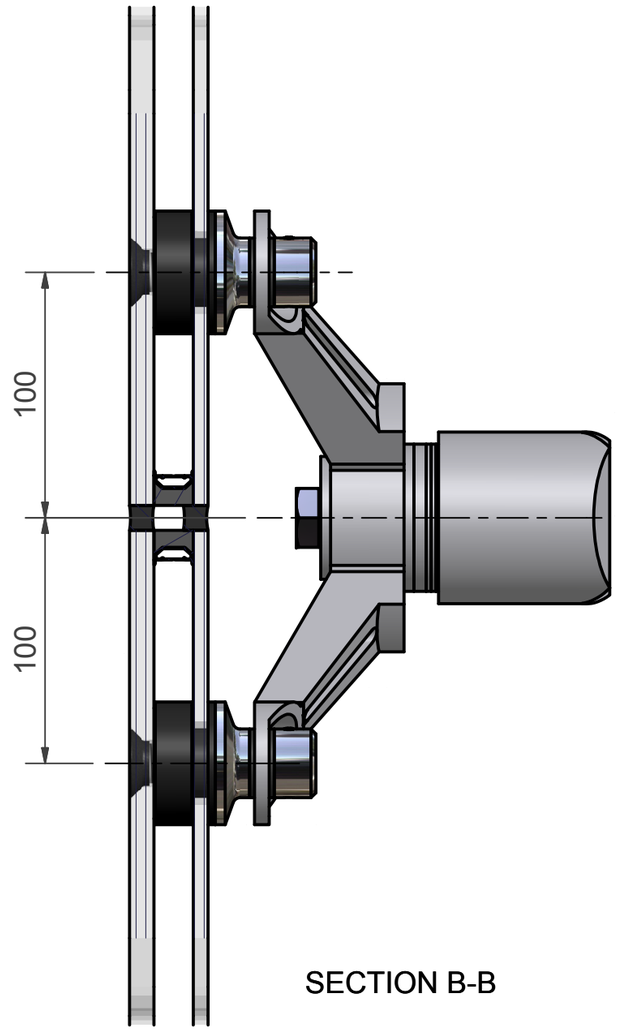


SECTION B-B

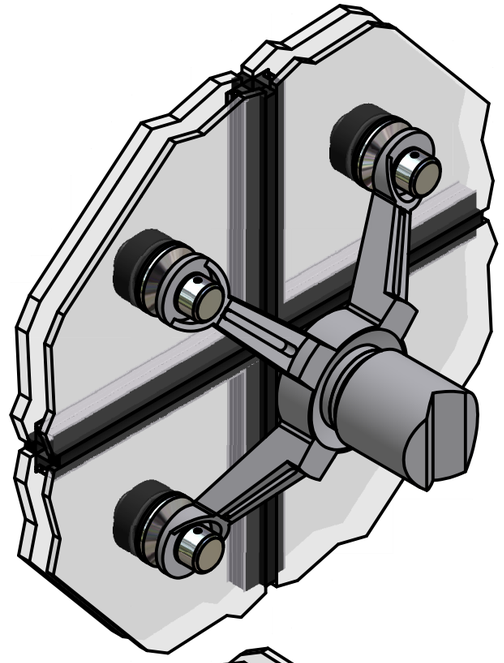

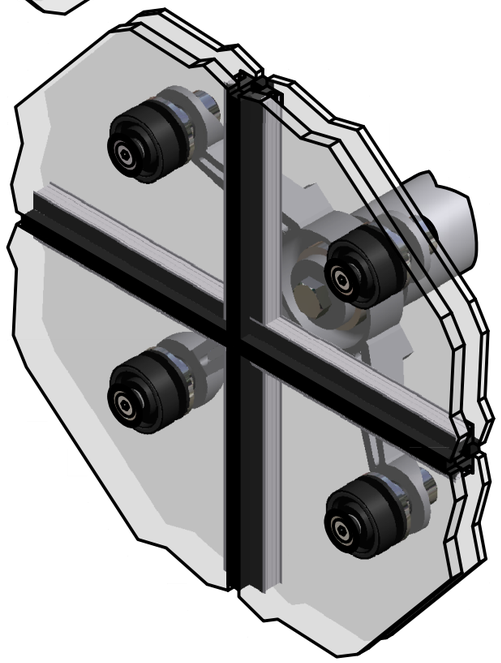

THIS DRAWING IS THE PROPERTY, THE DESIGN AND THE COPYRIGHT OF

Pilkington Architectural
Alexandra Works
Borough Road
St. Helens
England
WA10 3WA

PILKINGTON

TELEPHONE: 01744-692803 FAX: 01744-692988

INFORMATION AND DETAILS TO BE TREATED IN CONFIDENCE.
NOT TO BE COPIED WITHOUT PERMISSION.

| SCALE @ A3 | DATE | DO NOT SCALE |
|---|---|---|
| NTS | 08/08/2006 | ALL DIMENSIONS IN MILLIMETRES |

DESCRIPTION Pilkington Planar™ Typical Detail of

**IGU DHSS CASTING**

| CLASS | SECTION | GLASS TYPE | NUMBER | ISSUE |
|---|---|---|---|---|
| SD | 04 | 3 | 07 | 07 |